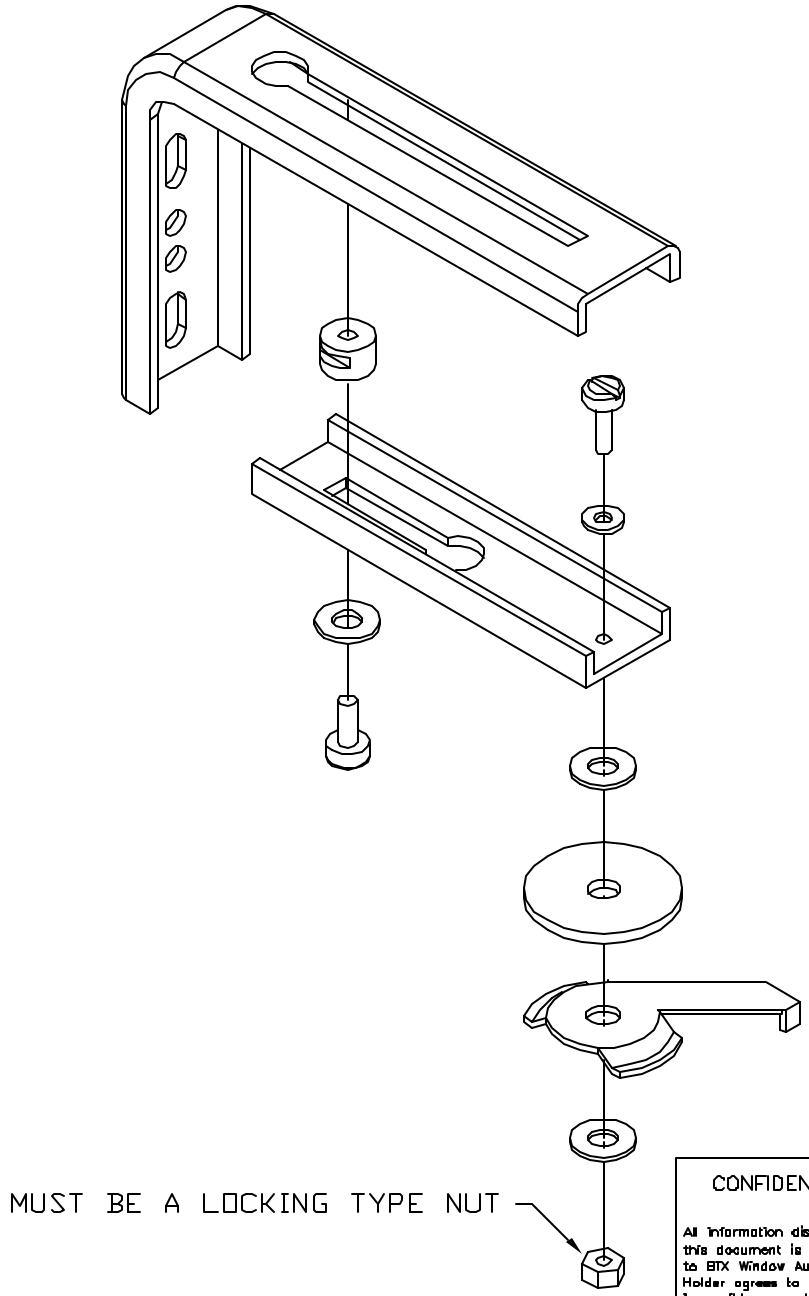

CONFIDENTIAL

All information disclosed in this document is proprietary to BTX Window Automation. Holder agrees to maintain it in confidence and must not replicate or reveal this information in any manner.

Project 5060

Dim INCHES

Tolerances

.XX ± .015
.XXX ± .005
ANG ± .5°

By: G. BENNETT

BTX™

BTX Window Automation
10[illegible] Alder Circle
Dallas, Texas 75[illegible]
(214) 343-1810
(214) 343-3444 FAX

Title
5060 WALL BRACKET EXPLODED VIEW

Size	Matl:	Dwg No:	Rev
A		220bracket00	

Date: 09-AUG-00 | Scale: NTS | Sheet 1 of 1